Product data sheet
Characteristics

XCE103C
Steel roller plunger, vertical actuation

Main

Range of product	OsiSense XC
Series name	Basic
Product or component type	Limit switch
Product specific application	Medium duty
Device short name	XCE
Body type	Fixed
Head type	Plunger head
Material	Plastic and metal
Fixing mode	By the body
Movement of operating head	Linear
Type of operator	Spring return roller plunger stainless steel
Switch actuation	On end
Type of approach	Traverse approach, 1 direction
Electrical connection	Screw-clamp terminals, clamping capacity: 1 x 1.5 mm²
Cable entry	1 flexible rubber cable gland, cable outer diameter: 6…9 mm
Number of poles	2
Contact operation	Snap action
Positive opening	Without
Maximum force for tripping	9 N

Complementary

Contacts insulation form	Za
Minimum release force	1.5 N
Minimum actuation speed	5 mm/s
Maximum actuation speed	0.5 m/s
Maximum operating rate	120 cyc/mn
Contact code designation	A300, AC (Ue = 240 V), Ie = 3 A, Ithe = 10 A conforming to IEC 60947-5-1 R300, DC (Ue = 220 V), Ie = 0.3 A conforming to IEC 60947-5-1
Maximum resistance across terminals	25 MOhm
[Uimp] rated impulse withstand voltage	4 kV conforming to EN/IEC 60664
Electrical durability	800000 cycles, AC, 3 A, 220 V
Mechanical durability	10000000 cycles
Width	28 mm
Height	112 mm
Depth	25 mm
Net weight	0.126 kg
Terminals description ISO n°1	(3-4-1-2)OF

The information provided in this documentation contains general descriptions and/or technical characteristics of the performance of the products contained herein.
This documentation is not intended as a substitute for and is not to be used for determining suitability or reliability of these products for specific user applications.
It is the duty of any such user or integrator to perform the appropriate and complete risk analysis, evaluation and testing of the products with respect to the relevant specific application or use thereof.
Neither Schneider Electric Industries SAS nor any of its affiliates or subsidiaries shall be responsible or liable for misuse of the information contained herein.

Environment

Shock resistance	30 gn for 11 ms conforming to IEC 60068-2-27
Vibration resistance	+/- 3 mm (f= 10…55 Hz) conforming to IEC 60068-2-6
IP degree of protection	IP65 conforming to IEC 60529
Electrical shock protection class	Class I conforming to EN/IEC 60947-5-1
Ambient air temperature for operation	-25…70 °C
Ambient air temperature for storage	-40…70 °C
Marking	CE CCC
Standards	IEC 60947-5-1 GB 14048.5

Offer Sustainability

REACh Regulation	REACh Declaration
EU RoHS Directive	Pro-active compliance (Product out of EU RoHS legal scope) EU RoHS Declaration
Mercury free	Yes
RoHS exemption information	Yes

Contractual warranty

Warranty	18 months

Dimensions

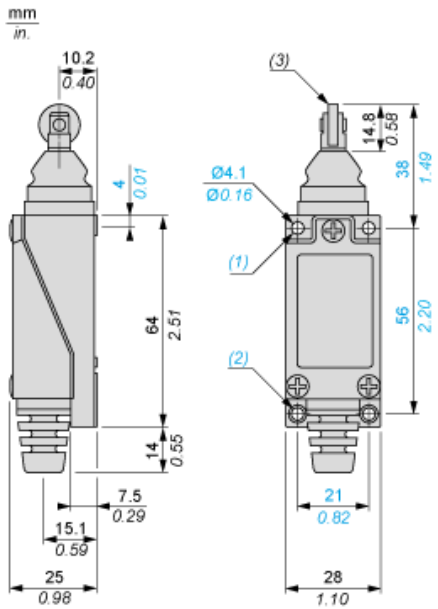

(1) : 2 holes M5 tapped 7mm / 0.27 inches in depth.
(2) : 2 M5 tapped holes.
(3) : Stainless steel roller Ø 12.5 x 3.8 mm / Ø 0.49 x 0.15 in.

Connection and Schema

Wiring Diagram

1 NO + 1 NC

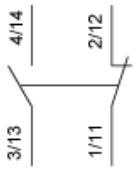

Technical Description

Type of Operator and Functional Diagram, Travel Distance

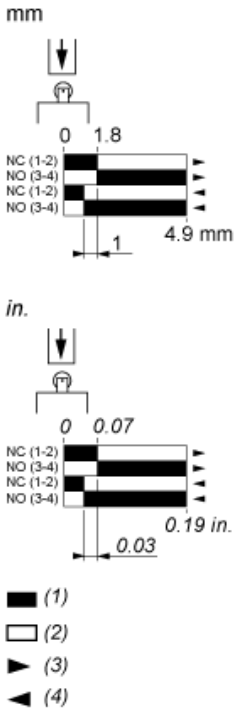

(1) : Contact closed
(2) : Contact open
(3) : Tripping
(4) : Resetting