FX3/OP-OF

FX

PHOTOELECTRIC SENSORS FOR DIN-RAIL MOUNTING

- Fibre-optic amplifier for DIN-rail mounting (DIN/EN 50022)
- Distance setting by means of teach in with additional manual fine adjustment (FX4)
- Distance setting by means of 12-turn potentiometer with illuminated scale (FX3)
- Adjustable pulse delay and stretching (FX4)
- High switching frequency: 1,5 kHz
- Ideal for stacking, thanks to 10 mm housing width
- Teach 1 (background), Teach 2 (target and background) (FX4)
- Large setting range of 20...200 mm

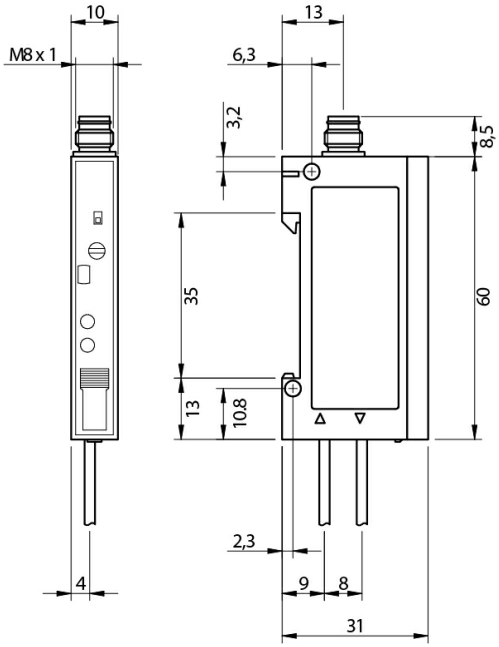

Detection properties

Nominal sensing distance	Vedi tabella delle fibre ottiche
Operative range	20...200 mm
Thermal drift of Sr	0.2 % / °C
Sensitivity adjustment	Potenziometro
Hysteresis	10%

Outputs

Output type	PNP
Output Function	LO/DO
Switching frequency	≤ 1,500 Hz

Electrical data

Operating Voltage	10...30Vdc
No-Load supply current	≤ 15 mA typ. A / a UB =24 V
Load current	≤ 200 mA
Leakage current	≤ 0.1 mA
Output voltage drop	≤ 20% V a / a 200 mA
Max ripple content	≤ 20% V / al / UB
LED indicators	Giallo (uscita attivata); verde (alimentazione)
Time delay before availability	300 ms
Short-circuit protection	Si
Reverse Polarity Protection	Si
Emission	Led Rosso
Interference to external light	5.000lux (lampada ad incandescenza), 10.000lux (luce solare)
Impulsive Overvoltage Protection	Si

Mechanical data

Dimensions	10x31x60 mm
Weight	18 g
Housing Material	PBTP
Connections	M8 plug 4 pin
Operating temperature	- 25°C...+ 55°C (senza condensa)

Test/Approvals

Approvals	CE
EMC compatibility	EN 60947-5-2
Shocks and vibrations	IEC 60947-5-2 / 7.4
Degree of protection	IP64

Generical Data

Dimensions	10x31x60 mm
Operating Temperature	- 25°C...+ 55°C (senza condensa)
Mechanical Protection	IP64

Datasensing S.r.l.
Strada S.Caterina, 235
41122 Modena (MO)
Tel. 059 420411
Fax 059 253973
E-mail info@datasensing.com

date of printing
28/04/2022 22:27:15