Baumer
Passion for Sensors

Inductive distance measuring sensors

IR06.D03L-Q46.UA1T.7SL

Inductive distance measuring sensors - linearized

Article number: 11176070

overview

- 0 … 3 mm
- voltage output
- Teach-in
- connector M8
- -25 … 75 °C
- IP 67

Technical data

general data	
mounting type	quasi-flush
special type	linearized
measuring distance Sd	0 … 3 mm
sensitivity	3,33 V/mm
resolution	< 0,003 mm (stat.) < 0,009 mm (dynam.,S = 0 ... 2 mm) < 0,018 mm (dynam.,S = 0 ... 3 mm)
repeat accuracy	< 0,01 mm
adjustment	Teach-in
linearity error	± 10 µm (S = 0 ... 2 mm) ± 90 µm (S = 0 ... 3 mm)
temperature drift	± 2 % (Full Scale; S = 0 ... 2 mm) ± 6 % (Full Scale; S = 0 ... 3 mm)
Teach-Feedback	LED yellow
electrical data	
response time (factory characteristic)	< 2 ms

electrical data	
voltage supply range +Vs	12 … 30 VDC
current consumption max. (no load)	12 mA
output circuit	voltage output
output signal	0 ... 10 VDC
load resistance	> 4000 Ohm
short circuit protection	yes
reverse polarity protection	yes
mechanical data	
type	cylindrical smooth
housing material	stainless steel
dimension	6,5 mm
housing length	46 mm
connection types	connector M8
ambient conditions	
operating temperature	-25 … +75 °C
protection class	IP 67

remarks

- linear analog output
- magnetic Teach

2019-11-25 The product features and technical data specified do not express or imply any warranty. Technical modifications subject to change.

IR06.D03L-Q46.UA1T.7SL

Inductive distance measuring sensors - linearized

Article number: 11176070

dimension drawing

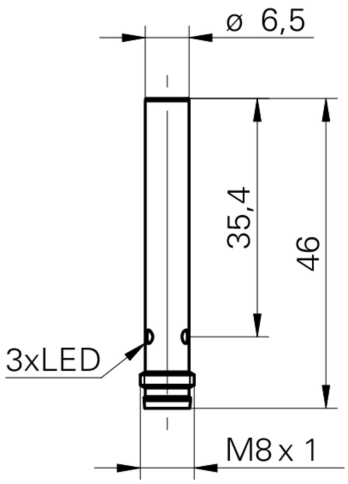

connection diagram

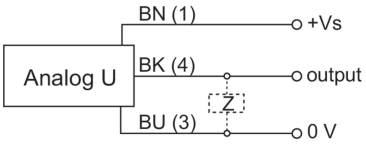

pin assignment

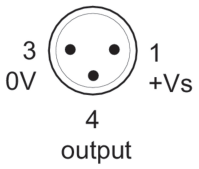

2019-11-25 The product features and technical data specified do not express or imply any warranty. Technical modifications subject to change.